TRANSACTIONS, ILL. STATE ACAD. SCI.
VOL. 67, No. 4 (1974)

TRANSITORIZED POTENTIOSTAT FOR NONAQUEOUS REDUCTIONS

Robert C. Duty and Gary Biolchini
Department of Chemistry
Illinois State University, Normal, Illinois 61761

An inexpensive high current--high voltage potentiostat for electrolytic reductions in nonaqueous solvents has been constructed in this laboratory. The goal was to construct a potentiostat that would reduce a 10 to 15 milliequivalent-sample in one working day (8 hrs.). We started with the basic solid-state circuit of Tackett and Knowles (Tackett, 1966), which could deliver only 16 ma through a 500 ohm load, and added a second power supply with a full-wave rectifier and filtering circuit plus three current boosting field-effect power transitors. With the additional power transitors, we could produce a 120 ma current through a 600 ohm load resistance.

Nonaqueous polarographic reductions are common techniques which have been extensively studied by numerous investigators including Zuman (Zuman, 1964 & 1970) and Wawzonek (Wawzonek, 1955) who have contributed a great deal to advancing this field to its present day renaissance. Coupled with organic polarography, a chemist is often times interested in isolating a product which is predicted by the polarograms and postulated by the researcher's proposed mechanism. The controlled potential reduction at the half-wave potential of the polarogram provides the researcher with a technique which is capable of isolating and/or trapping the proposed intermediate.

Carbenes and benzyne intermediates are examples which have been generated by electrochemical means (Wawzonek, 1961; Wawzonek, 1963). Recently, in this laboratory, we have incorporated a laboratory constructed potentiostat to operate in nonaqueous systems, and studied the dimerization of difluorenylidene generated from 9,9-dichlorofluorene at a controlled reduction potential of -0.39 v (Duty, 1974).

Earlier, two investigators (Tackett, 1966) had described an inexpensive solid-state potentiostat which had a maximum voltage output of 5 volts and a maximum current output of 2 amp. Later, two potentiostats were described (Bottei, 1970) which employed an operational amplifier with a voltage booster. In addition, Bottei and Boczkowski's circuit schematics incorporated a power tube booster in one potentiostat and a power transitor booster in the other.

In this laboratory we were in need of an inexpensive high current-high voltage potentiostat for electrolytic reductions in the nonaqueous solvent dimethylformamide. The high current was desirable because we anticipated

unfavorable side reactions with extended reduction times. Our goal was to construct a potentiostat that would reduce a 10 to 15 milliequivalent sample in one working day (8 hours).

The solid-state potentiostat of Tackett and Knowles, which could meet our expense budget but not our ma current requirement, could only supply 16 ma through a 500 ohm load resistance. This was a lower resistance than we anticipated for our nonaqueous reductions (1000 ohms). With this amount of current flow, a reduction of 10 milliequivalents of compound would require at least 16 hours to complete. This low current output through high resistances is also a disadvantage of the solid state emitter-follower circuits suggested by Bottei and Boczkowski since their current capacity is increased through low resistances but does not increase through high resistances.

The Potentiostat

The wiring diagram for our potentiostat is shown in Figure 1. The circuit consists of two power supplies; one to provide voltage for the reference voltage and voltage regulation sections, and a second to provide the necessary voltage increase demanded by the nonaqueous reductions. Both power supplies are designed with conventionally regulated d.c. voltages containing full-wave rectifier and filter sections. The dashed-line area in Figure 1 includes the circuit that was adapted from Tackett and Knowles. We started with this basic solid-state circuit and added to it the second power supply including the full-wave rectifier and filter circuit plus the current boosting transistors, Q_5, Q_6, and Q_7. The output signal from the differential amplifier, transistors Q_1 and Q_2, is fed through the power transistors, Q_4, Q_5, Q_6 and Q_7. The reference voltage is set by R_4 against a standard reference electrode. The diodes, CR_{10} and CR_{11}, are zener diodes which comprise the reference voltage from which R_5 and R_6 set the limits for the reference voltage required by R_4.

The added circuit of transistors Q_5, Q_6 and Q_7 increases the current capacity of the potentiostat for operation in nonaqueous systems which have voltage 0 to 8 volts on its base produced 30 to 8 volts, respectively, on the collector. Since Q_6 is in phase with the base voltage of Q_5, transistor Q_6 changes from 0 to 90 volts when the base voltage of Q_5 changes from 0 to 8 volts. The output of transistor Q_6 is applied to the base of Q_7 which is an emitter-follower output circuit. Consequently, with the addition of the circuit containing transistors Q_5, Q_6 and Q_7, a reduction of 10 milliequivalents of compound would require only 2 hours with a load resistance of 500 ohms instead (see Table I) of the previously calculated 16 hours for the Tackett and Knowles circuit.

The circuit of transistors Q_5, Q_6 and Q_7 had current capacities through various load resistances as given in Table I. With the reference voltage set at approximately 1 volt, a change of $\pm$ 0.01 volt produces a 1 volt - 2 ma change through 600, 400 or 200 ohm loads. The ripple voltage was $\pm$ 0.01 volt with 60 ma flowing through a 600 ohm load as measured with a Heath oscilloscope Model EUW-25.

FIGURE 1
Solid-State POTENTIOSTAT

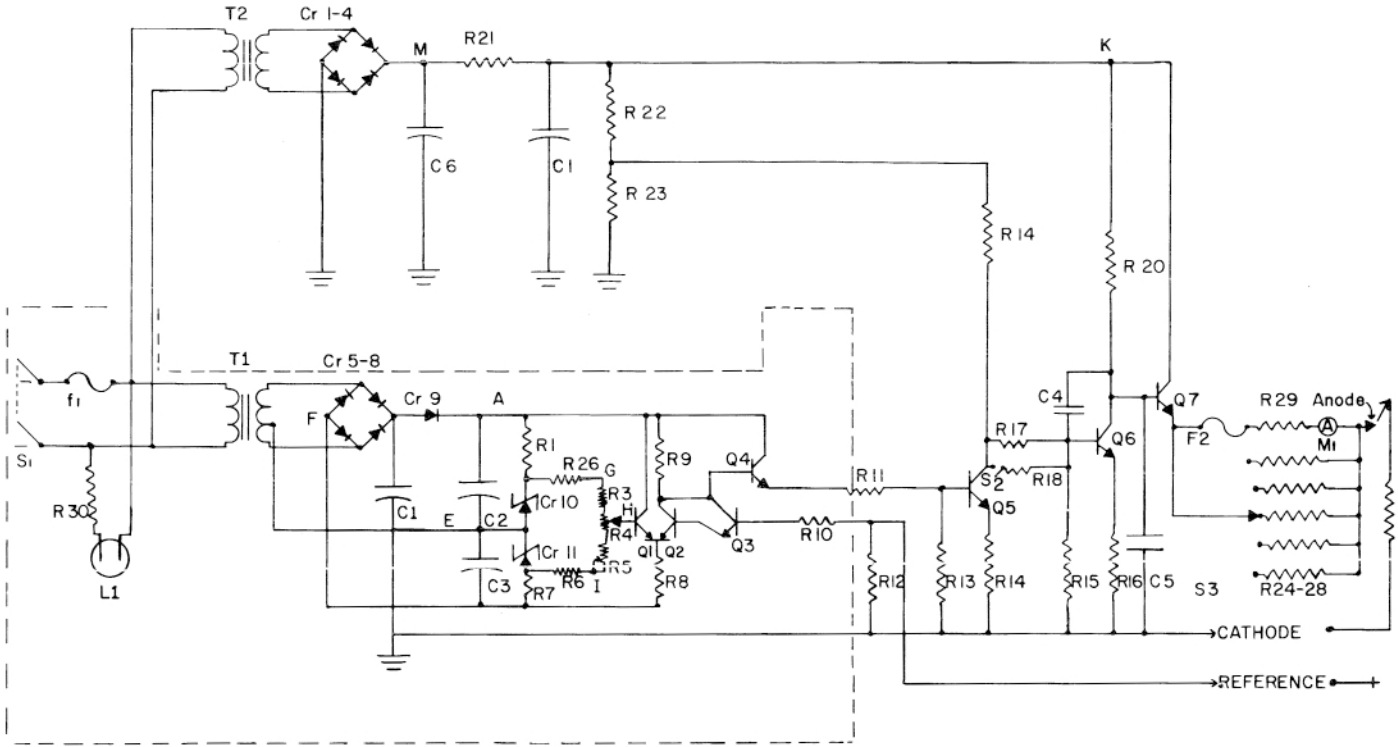

Table I

Load Resistance, Current and Voltage

Range[a]	Load (ohms)[b]	Output Current (ma)[c]		Output Voltage (volts)[d]	
		Max	Min	Max	Min
1	1000	90	22	90	22
2	1000	90	0	90	0
1	300	100	24	80	19.2
2	800	100	0	80	0
1	600	120	33	72	19.8
2	600	120	0	72	0
1	400	180	42	72	16.6
2	400	180	0	72	0
1	200	280	100	56	20
2	200	280	1	56	0.2
1	100	400	180	39	18
2	100	400	2	39	0.4

[a]The range switch (S_2 in Figure 1) was added in the event that the current through the cell can not be allowed to go to zero.

[b]Obtained by using 200 ohm, 10 watt and 10% resistors.

[c]Measured with external milliammeter (Weston Model 980 Mark II). Max Value Ref. electrode voltage is less than set reference voltage (set by R_4). Min Value is obtained when Ref. electrode voltage is greater than set reference voltage.

[d]Measured with Heath EUW-24 VTVM.

A complete parts list for the potentiostat is given in Table II. The total cost of the parts taken from current catalogs is less than $225. As can be seen from the schematic, a vacuum tube voltmeter (VTVM) is required to complete the potentiostat. If a school does not have a VTVM available, this would be an additional expense to consider.

ACKNOWLEDGMENTS

The authors wish to express their appreciation to the Illinois State University Research Committee for their support of this project. This paper was presented at the 66th Annual Meeting of the Illinois State Academy of Science.

LITERATURE CITED

DUTY, R.C., G. Biolchini and W. Matthews, 1974. Nonaqueous Potentiostatic Reduction of 9,9-Dichlorofluorenylidene. Anal. Chem., 46, 167.

BOTTEI, R.S., and R. J. Boczkowski, 1970. Amplifier Voltage Boosters for High Resistance Electrochemical Cells. J. Chem. Educ., 47, 312.

TACKETT, S.H. and J.A. Knowles, 1966. A Simple Potentiostat for Controlled Potential Electrolysis. Ibid, 43, 428.

WAWZONEK, S., E.W. Blaha, R. Berkey, and M.E. Runner, 1955. Behavior of Aromatic Olefins and Hydrocarbons. J. Electrochem. Soc., 102, 235.

WAWZONEK, S., and J. H. Wagenknecht, 1963. The Formation of Benzyne. Ibid, 110, 420.

ZUMAN, P., 1964. Organic Polarographic Analysis. The MacMillian Co., New York.

ZUMAN, P. Ed., 1970. Topics in Organic Polarography. Plenum Press, New York.

Table II

Parts List for Potentiostat

R1, R7	1 K, $\frac{1}{2}$ W, 5%	C1	18,000 mf, 25 v
R2	3.3 K, $\frac{1}{2}$ W, 5%	C2, C3	500 mf, 30 v
R3, R4, R5	2 K, 10 turn, potentiometer	C4	0-22 mf, 200 v
R6	3.9 K, $\frac{1}{2}$ W, 5%	C5, C7	100 mf, 100 v
R8	1-3 K, $\frac{1}{2}$ W, 5%	C6	500 mf, 200 v
R9	5.1 K, $\frac{1}{2}$ W, 5%	CR1-8	Diode Motorola HEP-170
R10	6.2 K, $\frac{1}{2}$ W, 5%	CR9	IN4383
R11	15 K, $\frac{1}{2}$ W, 5%	CR10, CR11	IN752
R12	22 meg, $\frac{1}{2}$ W, 5%	F1	$\frac{1}{2}$ a Slo-Blow, 3 AG
R13, R17	10 K, $\frac{1}{2}$ W, 5%	F2	1/8 a, 3 AG
R15	16 K, $\frac{1}{2}$ W, 10%	L1	Pilot lamp NE-2 Neon
R14, R16	100 ohm, 2 W, 5%	M1	0-100 a meter 2 K ohm
R19, R23	10 K, 5 W, 10%	Q1-3	2N3392
R20	15 K, 10 W, 10%	Q4-5	Motorola HEP-243
R21	350 ohm, 12 W, 10%		Silicon NPN Med.
			Power (Max 1W)
R22	15 K, 5 W, 10%		Collector Current
R24	0.22 ohm, 5 W, 1%		1 amp max
R25	2.2 ohm, 5 W, 1%		Similar to 2N2108
R26	22 ohm, 1 W, 1%	Q6	Motorola HEP-241
R27	220 ohm, $\frac{1}{2}$ W, 1%		Silicon NPN 20 W max.
R28	2200 ohm, $\frac{1}{2}$ W, 1%		Collector Current 3
			amp max. Similar to
R29	20 K, $\frac{1}{2}$ W, 1%		RCA 2K3026
R30	180 K, $\frac{1}{2}$ W, 10%		
S1	DPDT, toggle switch	Q7	2N 1490 NPN diffused
			junction. Collector
S2	SPST, toggle switch		current 6 amp max
S3	SP6 Position, rotary switch		75 W. max
T1	Transformer, 12.6 v		
	C.T., 1-5a	T2	Transformer, 80 v
			C.T., 1-2a

Misc. -- $7\frac{1}{2}$ x $13\frac{1}{4}$ Cabinet Allied #42F7254, Heat Sinks Allied #60F6510 and 60F650, 7 x 12 x 7 Chasis Buc #AC-408, Knobs #16 Gauge Stranded Copper Wire, Jacks Allied #47F3900, Printed Circuit Boards Allied #47F0942, and Transistor Sockets Allied #47F0262 and 47F1047.